HD TPMS RiteSensor Band Mounted Sensor Fitment Instructions

Caution

• The HD TPMS RiteSensor is only approved for use with one-piece rims ranging from 17.5 to 24.5 inches. The maximum permissible speed for the HD TPMS RiteSensor is 130 km/h, 80mp/h.

• Do not use the sensor if it is damaged or shows visible defects, replace it with a new sensor and contact your supplier.

• Verify that the sensor is compatible and communicating with your vehicle before fitting and has been programmed for your vehicle's specific make, model and year using a compatible TPMS programming tool.

• The sensor must not slip on the rim. For conical rims, the band must be positioned on the smallest diameter of the wheel.

• We recommend servicing or replacing the valve each time you replace a HD TPMS RiteSensor to ensure optimal operation. Any warranty is void in cases of improper sensor mounting or misuse. Ensure that no contact takes place between the bead breaker blade and the sensor to avoid potential damage to the sensor, and that fitted sensors are free of mounting paste contamination.

Exploded View

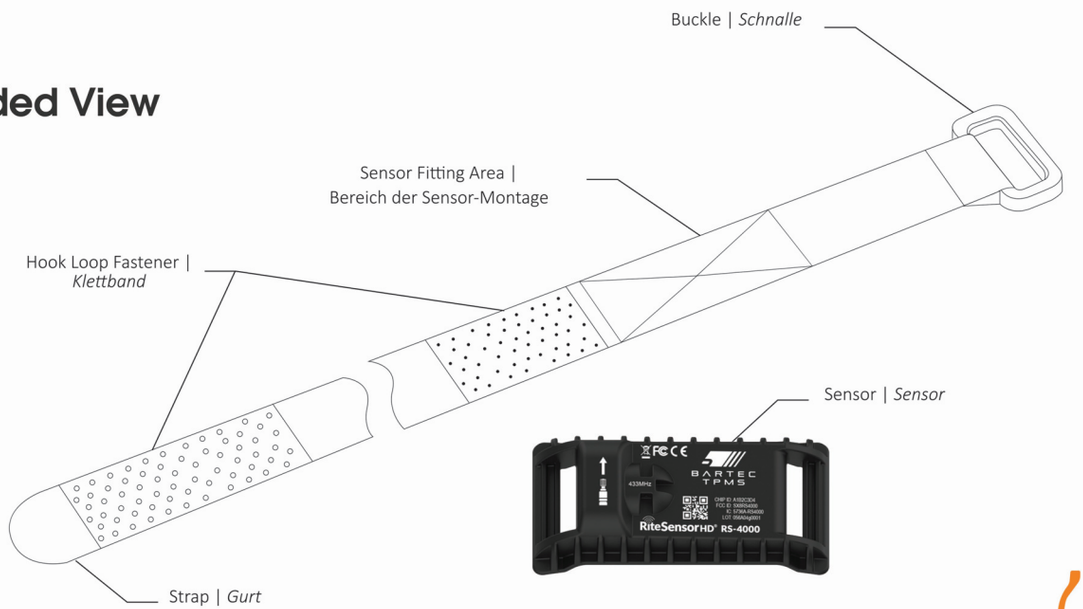

BARTEC TPMS THE TRUSTED BRAND

(855)877-9732 • bartecusa.com

REV 1.0_3.31.26

RITESENSOR HD - Strap - Flyer - 280x220mm.indd 1 31/03/2026 17:15

HD TPMS RiteSensor Band Mounted Sensor Fitment Instructions

1. Using an appropriate truck tire changing machine, remove the tire from the rim. Thoroughly degrease and clean the rim before attaching the HD TPMS RiteSensor.

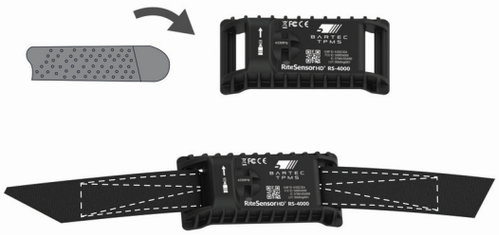

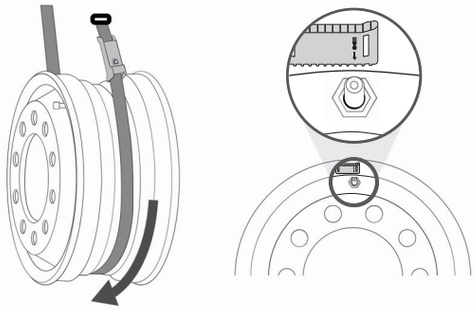

2. Insert the band, with the hook loop fastener side facing up, first through the left side of the sensor body and then out through the right side. Pull the band until the sensor is positioned in the sensor fitting area.

3. Place the banded sensor on the rim aligning the white arrow on the sensor with the centre of the valve hole, positioning the sensor near the valve.

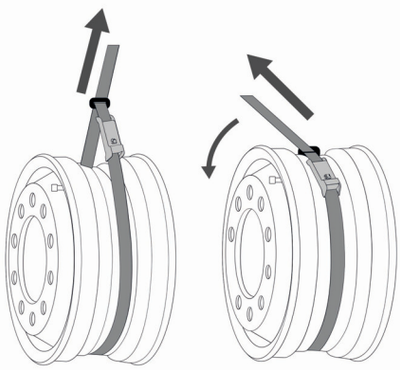

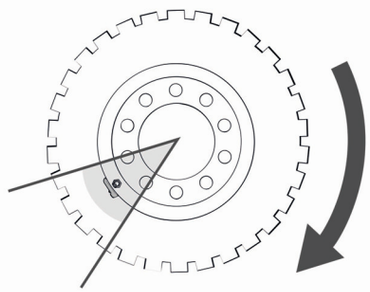

4. Tighten the band ensuring the sensor is securely fixed and cannot move or slip. Once the two layers of the band are bonded together, apply additional pressure along the band to ensure they are firmly secured.

5. When fitting the tire, ensure the HD TPMS RiteSensor does not come into contact with the tire. Carefully mount the first tire bead paying attention to the sensor position inside the wheel. Once the second tire bead has been mounted you can inflate the tire to prepare for fitting.

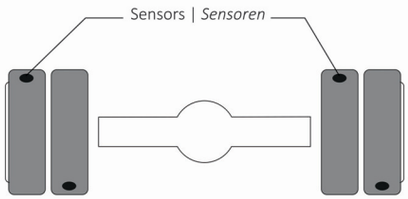

6. To ensure accurate TPMS readings on twin wheels, offsetting the valves prevents signal interference or cross-communications between sensors, which can cause incorrect or failed readings.